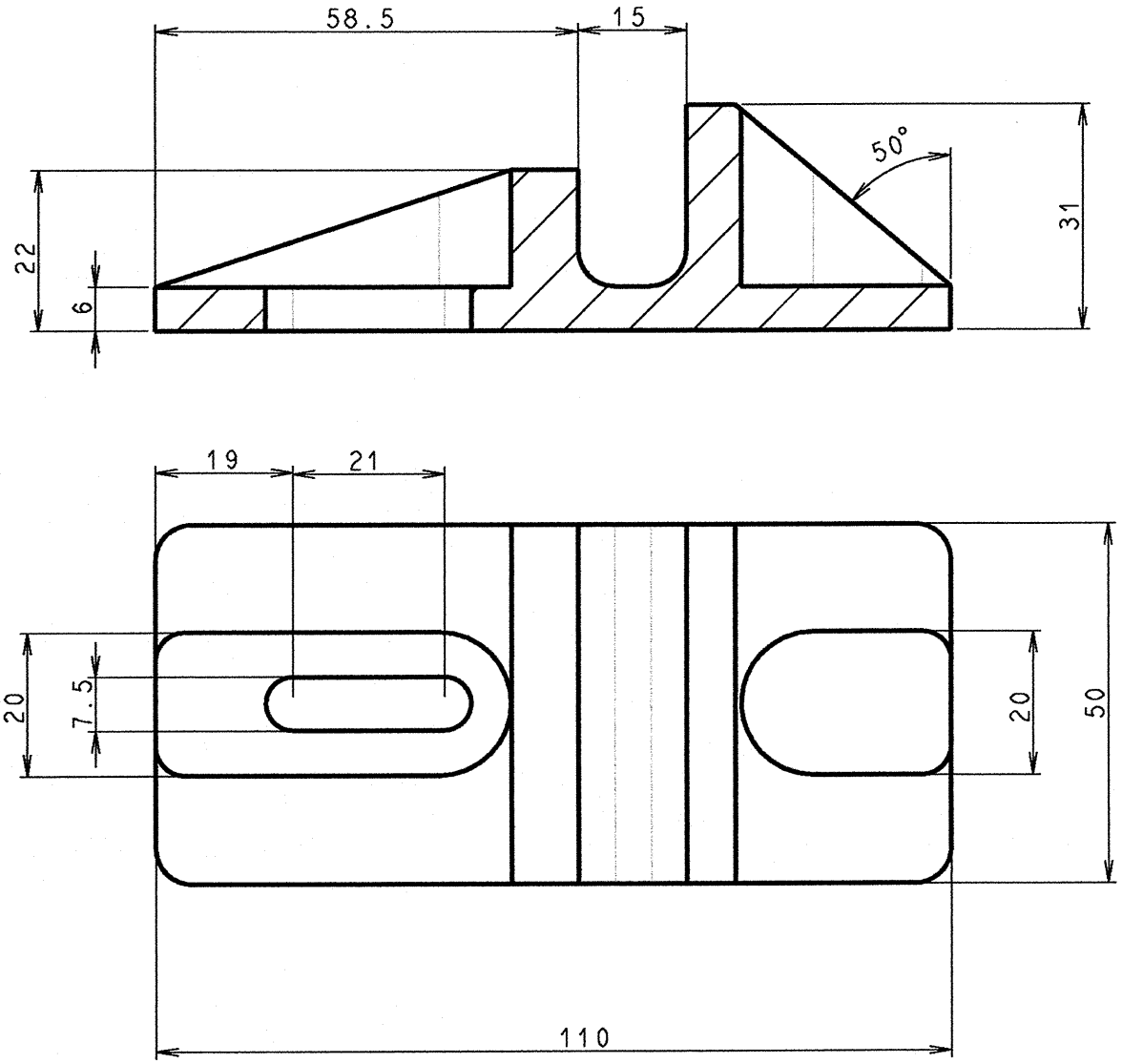

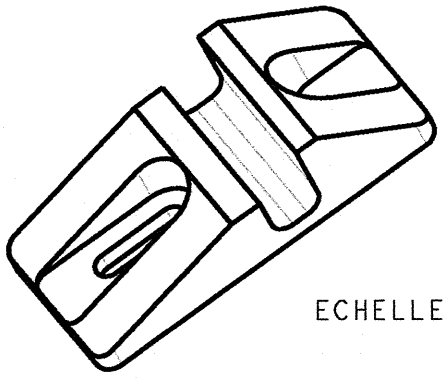

ECHELLE 1/2

MODIF.	MODIFICATION DESCRIPTION	DATE	NAME
A 00	REF APD100321 DEVIENT 9011074	10/10/03	CL

MATIERIAL:
ALUMINIUM
A-S13
-

GENERAL TOLERANCES AND GEOMETRIC TOLERANCES IN ACCORDANCE WITH SOM-DIRE 24(V1):
TF17 Svt NF A 66-001

Drawing By: CL date: 10-Oct-03
Approved By: D. DUMAL date: 13.10.03

SOMFY FRANCE

DESIGNATION: GACHE AU SOL

Scale: 1 / 1 Ind. Mink: A.00

N°: 9011074 A 00

A4

This drawing shall not be used, reproduced or passed on in any way, in full or in part, without SOMFY written approval. All rights reserved